Qualwave

Waveguide to Coax Adapter

QWCA-22-2

WR-22 to 2.4mm

Features:
* Low VSWR

Applications:
* Wireless
* Transmitter
* Laboratory Test
* Radar

Electrical

Frequency:	32.9~50.1GHz
VSWR:	1.4 max.
	1.3 max.(end launch)

Mechanical

Coax Connectors:	2.4mm
Waveguide Size:	WR-22
Flange:	UG-383/U
Material:	Gold plated brass

Environmental

Operating Temperature:	-70~+165°C

How To Order

QWCA-22-X-Y

X: Connector type.

Y : Configuration type.

Z : Flange type if applicable.

Connector naming rules:
2 - 2.4mm Male(Outline A, Outline B)
2F - 2.4mm Female (Outline A, Outline B)

Y: End launch: E, Right angle: R.
E - End launch (Outline A)
R - Right angle (Outline B)

Flange naming rules:
5 - UG-383/U mateable with FUGP400 (Outline A)

Examples:
To order a waveguide to coax adapter, WR-22 to 2.4mm female, right angle, specify QWCA-22-2F-R-5.

Customization is available upon request.

Outline Drawings

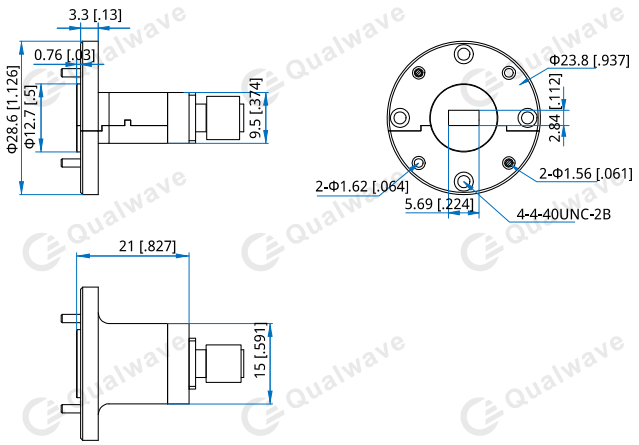

Outline A

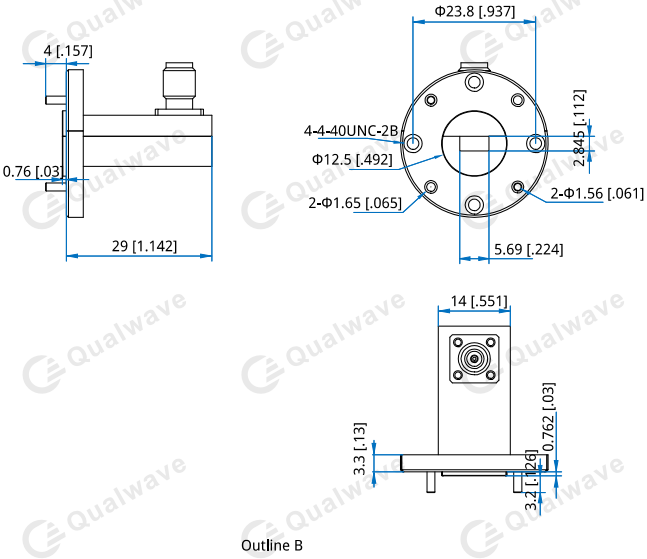

Outline B

Unit: mm [in]
Tolerance: ±0.2mm [±0.008in]